JRSTD63

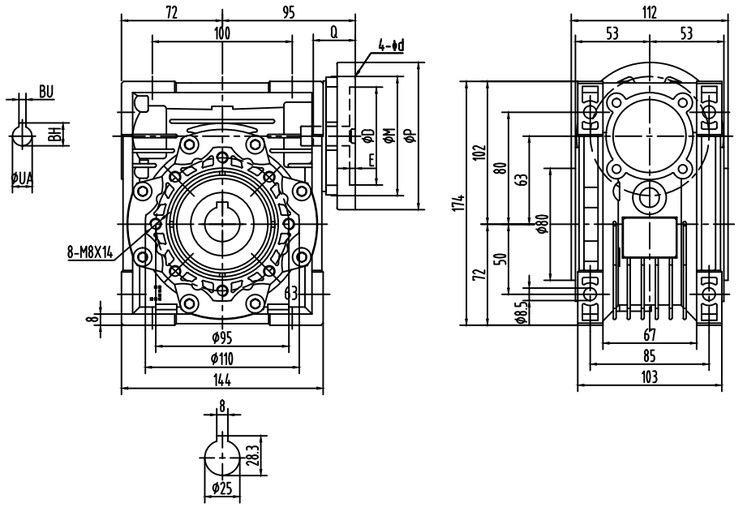

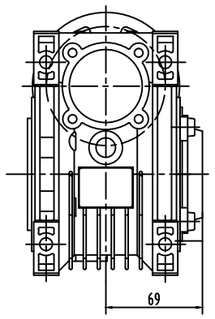

D-protective cover

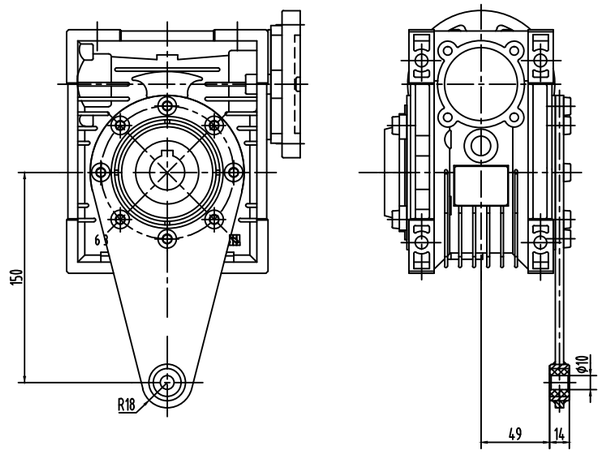

E-torque arm

Motor flange mounting dimensions

Dim / Motor flange	D	M	P	d	BH	BU	E	Q	The hole diameter of shaft UA, Ratio i: 7.5	10	15	20	25	30	40	50	60	80	100
90B5	130	165	200	11	27.3	8	6	50	24	24	24	24	24	24	-	-	-	-	-
90B14	95	115	140	9	27.3	8	6	50											
80B5	130	165	200	11	21.8	6	6	40	-	-	19	19	19	19	19	19	19	-	-
80B14	80	100	120	7	21.8	6	6	40											
71B5	110	130	160	9	16.3	5	5	30	-	-	-	-	-	-	14	14	14	14	14
71B14	70	85	105	7	16.3	5	4	30											

Output flange mounting dimensions

Dim / Output flange	KA	KB	KC	KN	KM	KO	KP	KQ	KT	KW
FA	82	10	6	115	150	11	180	142	–	45°
FB	112	10	6	115	150	11	180	140	–	45°
FC	98	11	5	130	165	11	200	–	80	45°
FD	107	11	5	130	115	11	200	–	80	45°
FE	80.5	16.5	6	110	130	11	160	–	–	45°

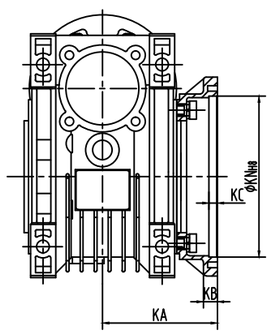

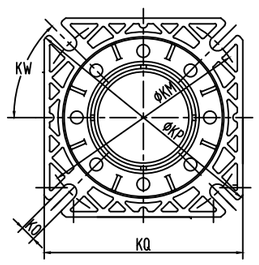

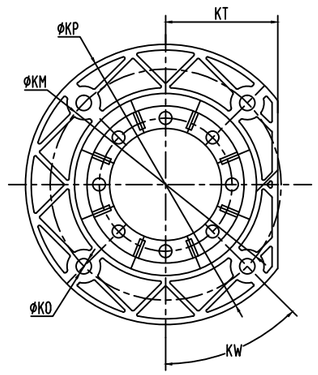

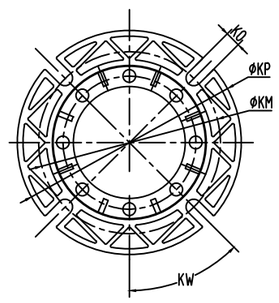

Output flange mounting dimensions

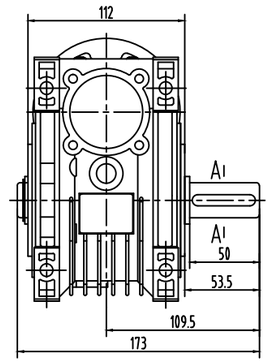

A-single output shaft

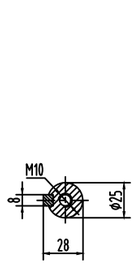

A-A

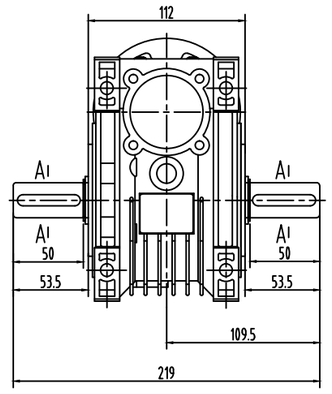

B-doubel output shaft

JIE JDRIVE

Worm Gear