JRSTD150-100B5/132B5/160B5

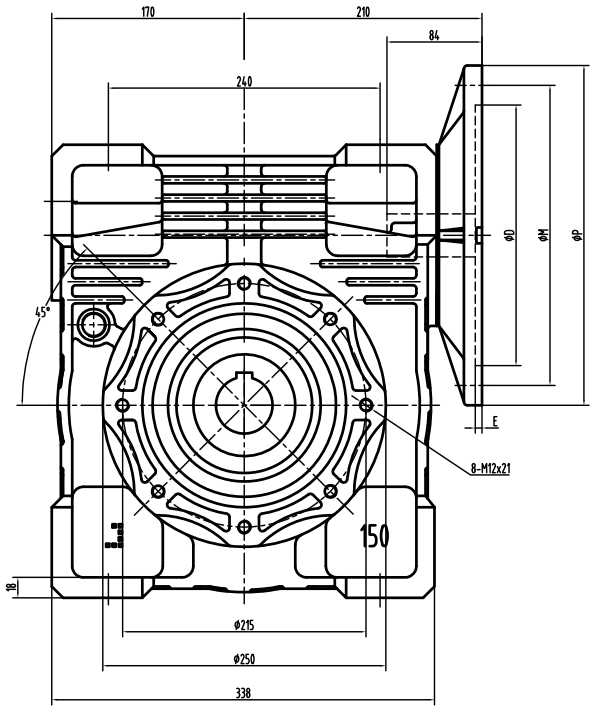

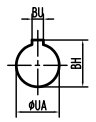

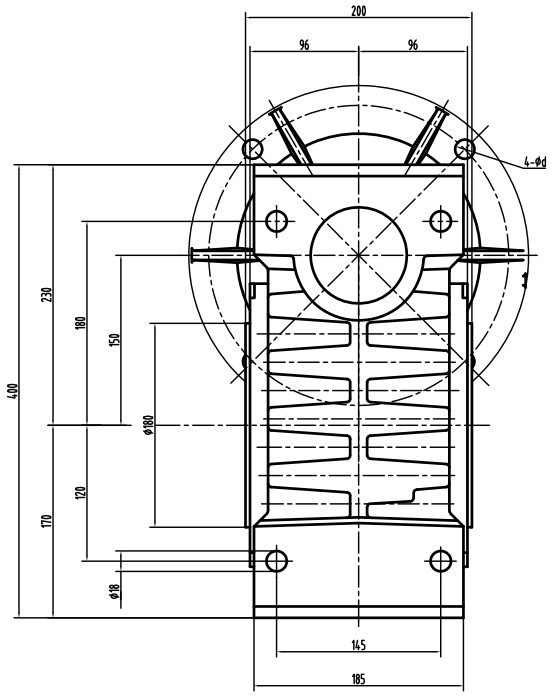

Motor flange mounting dimensions

Dim / Motor flange	D	M	P	d	BH	BU	E	Q	The hole diameter of shaft UA										
									Ratio i										
									7.5	10	15	20	25	30	40	50	60	80	100
100/112B5	180	215	250	14	31.3	8	6	58	-	-	-	-	-	-	-	-	28		
132B5	230	265	300	14	41.1	10	6	78	-	-	-	38						-	-
160B5	250	300	350	18	45.3	12	7	105	42					-	-	-	-	-	-

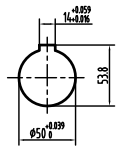

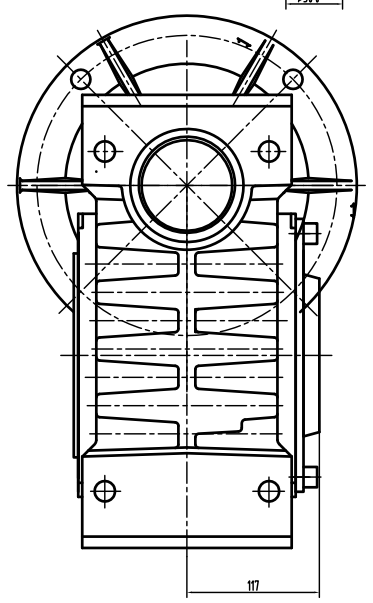

D-protective cover

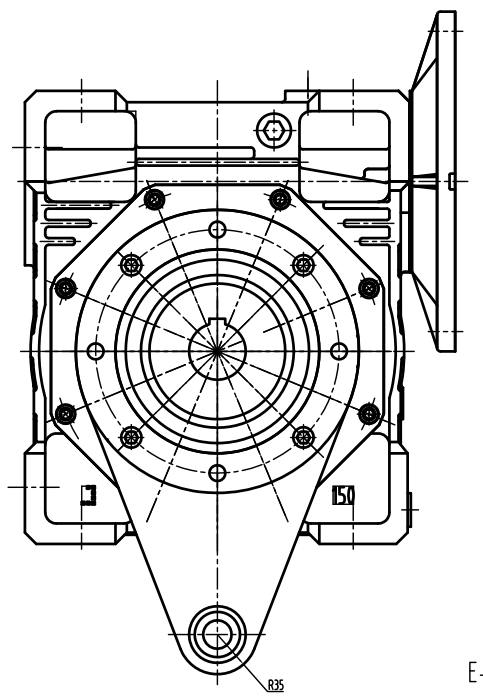

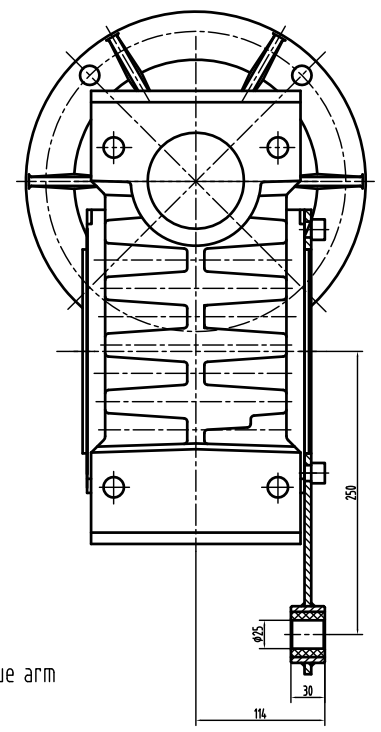

E-torque arm

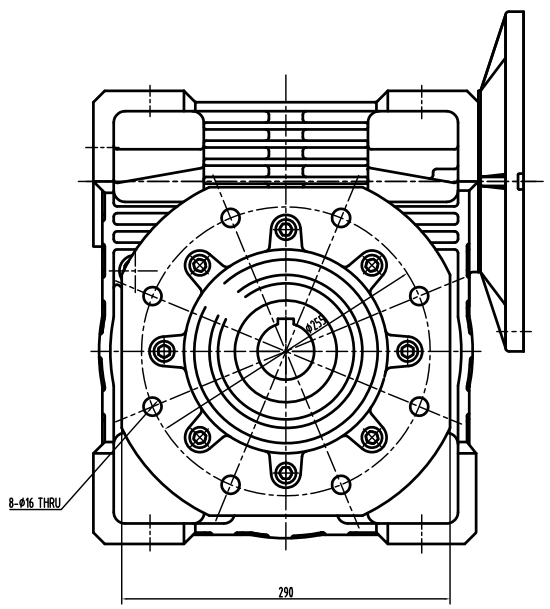

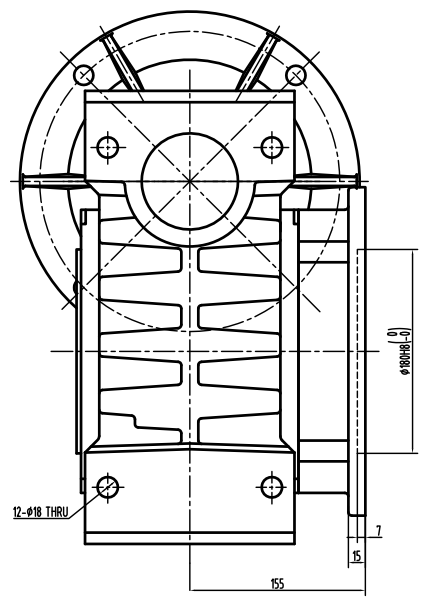

Output flange mounting dimensions

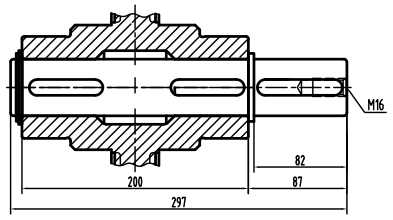

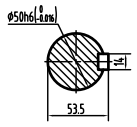

A-single output shaft

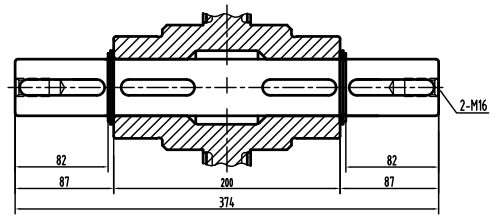

B-doubel output shaft

U	Q
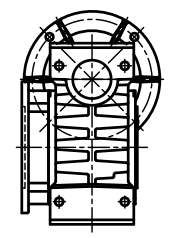	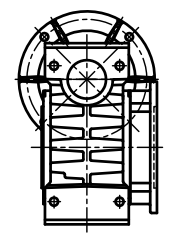

JDRIVE

Worm Gear