JRWND110-140TC/180TC/210TC

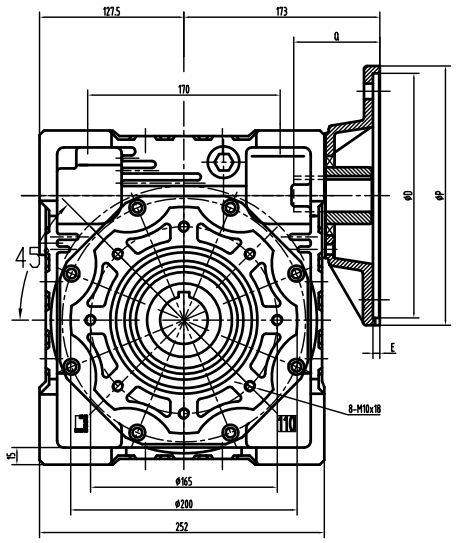

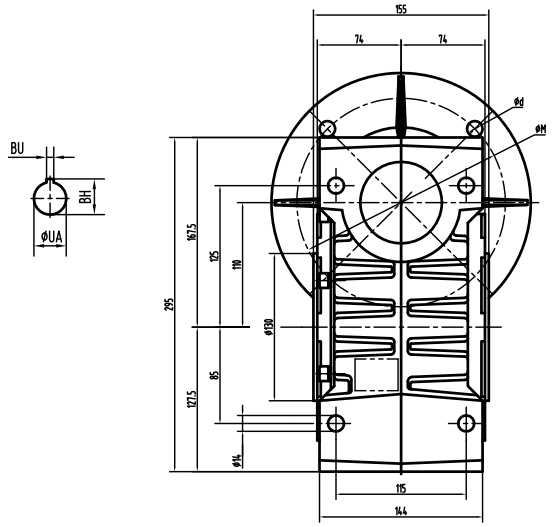

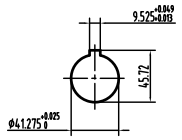

Motor flange mounting dimensions

Dim / Motor flange	D	M	P	d	BH	BU	E	Q	The hole diameter of shaft UA										
									Ratio i										
									7.5	10	15	20	25	30	40	50	60	80	100
140TC	114.3	149.4	165	10.5	24.6	4.78	6	59	22.23										
180TC	215.9	184.2	229	14	31.5	6.35	6	76	28.58							-	-	-	-
210TC	215.9	184.2	229	14	38.6	7.95	6	89	34.93				-	-	-	-	-	-	-

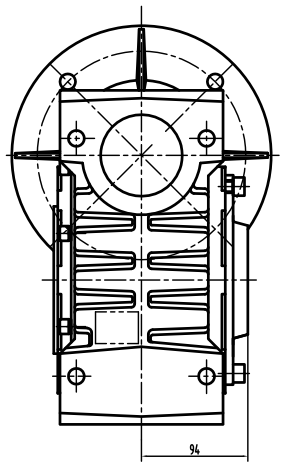

D-protective cover

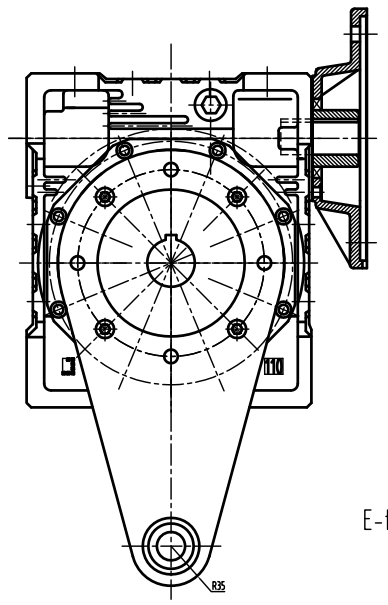

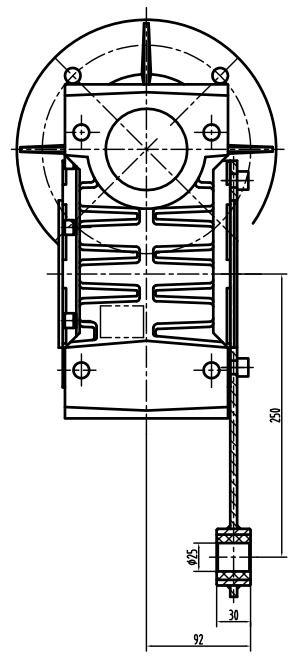

E-torque arm

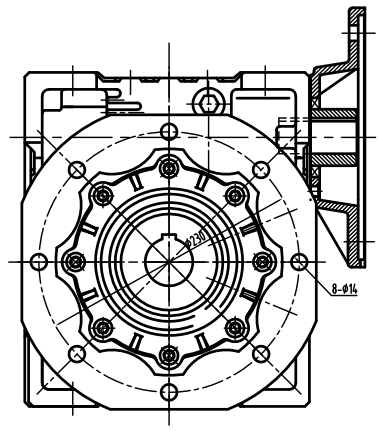

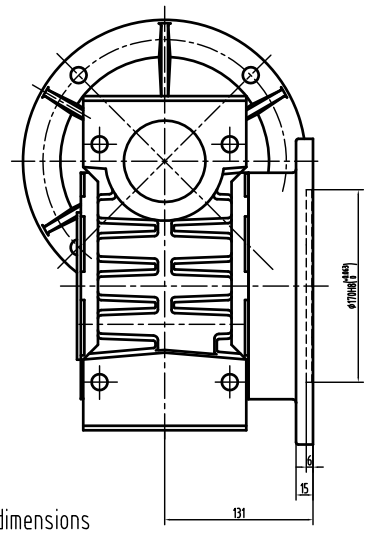

Output flange mounting dimensions

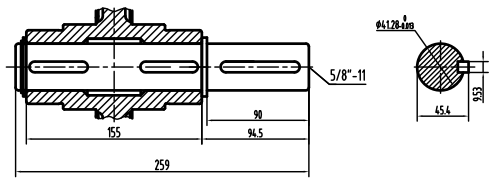

A-single output shaft

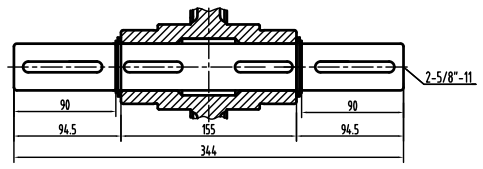

B-doubel output shaft

U	Q
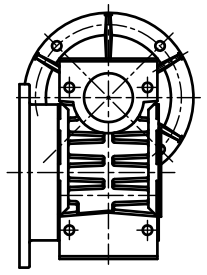	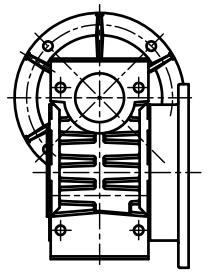

JDRIVE

Worm Gear